Hybrid Full-Bridge Three-Level LLC Resonant Converter — A Novel DC-DC Converter Suitable for Fuel Cell Power System*

Ke Jin and Xinbo Ruan

Aero-Power Sci-tech Center
College of Automation Engineering
Nanjing University of Aeronautics & Astronautics
Nanjing, 210016, Jiangsu Province, P.R.China
Phone: 0086-25-84892053; Fax: 0086-25-84893500
Email: jinke@nuaa.edu.cn, ruanxb@nuaa.edu.cn

***Abstract* — This paper proposes a novel hybrid full-bridge three-level LLC resonant converter. It integrates the advantages of the hybrid full-bridge three-level converter and the LLC resonant converter. It can operate not only under three-level mode but also under two-level mode, so it is very suitable for wide input voltage range application, such as fuel cell power system. The input current ripple and output filter can also be reduced. Three-level leg switches just sustain only half of the input voltage. ZCS is achieved for the rectifier diodes, and the voltage stress across the rectifier diodes can be minimized to the output voltage. The main switches can realize ZVS from zero to full load. A 200-400V input, 360V/4A output prototype converter is built in our lab to verify the operation principle of the proposed converter.**

I. INTRODUCTION

The environment concern is now the driving force for seeking new clean energy such as geothermal, photovoltaic, hydroelectric, wind generation, etc. Fuel cell is an electrochemistry device, it uses hydrogen, propane, natural gas, or other fuels to generate electricity without increasing pollution [1]-[3]. The emission of fuel cell is only water, and the noise is very low. Therefore, it has received more and more attention in distributed generation power system and electrical vehicles.

Fig.1 shows the block diagram of the fuel cell power system. The fuel cell has slow response and its output voltage fluctuates with the load [3], the range of the output voltage is about 200-400VDC, which is too wide to power the inverter. Therefore, a unidirectional DC-DC converter is needed to convert the variable output voltage of the fuel cell to a constant voltage. The DC-DC converter should be adaptive to the wide input voltage range.

[4] proposed a PWM zero-voltage-switching (ZVS) hybrid full-bridge (H-FB) three- level (TL) converter, which has the following advantages: 1) the switches of the three-level leg sustain only half of the input voltage, and they can realize ZVS in a wide load range. 2) the switches of the two-level leg sustain the input voltage, and they can realize ZVS with the use of the resonant inductor; and 3) the converter can operate both in three-level mode and in two-level mode, the secondary rectified voltage has lower high-frequency content, so the output filter inductor can be reduced significantly. The H-FB TL converter is very suitable for wide input voltage range. However, the rectifier diodes still suffer voltage spike caused by reverse recovery, and the lagging switch will lose ZVS at light load.

LLC resonant converter achieves ZVS for the power switches from nearly zero to full load, and the rectifier diodes can achieve ZCS, so no voltage oscillation occurs [5][6]. However, the LLC resonant converter adopts variable frequency control, the switching frequency range is too wide if the input voltage range is too wide, making the optimization of the converter be difficult.

[7] proposed a PWM full bridge LLC resonant converter, which employs constant frequency control. It is easily to optimize the magnetic component, and the popular phase-shifted control is employed. However, when it is submitted to wide input voltage range, the primary to secondary windings turns ratio of the transformer should be reduce, resulting in increasing of the voltage stress of the power semiconductors. In the meanwhile, wide variations of the duty cycle will also result in increasing circulation energy in the converter, and in a reduction in efficiency.

[8] proposed secondary control three-level LLC resonant converter, which is suitable for wide input voltage range applications. However, the additional power switches, diodes and winding in the secondary side of the transformer makes the circuit more complex, and the transformer is complex in construction too.

This paper introduces the concept of the LLC resonant tank into the ZVS PWM H-FB TL converter, the proposed converter integrates the advantages of the H-FB TL converter and the LLC resonant converter: 1) ZVS capability from nearly zero to full load; 2) the rectifier diodes sustain only the output voltage, and they can realize ZCS; 3) it can operate in three-level mode and two-level mode, so the input current ripple and output filter can reduced; and 4) high efficiency is

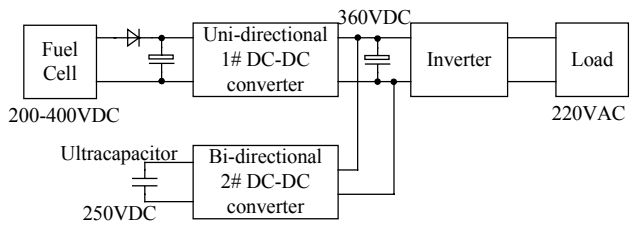

Fig.1 Block diagram of the fuel cell power system

* This work was supported by the National Natural Science Foundation of China under Award Number 50177013, and Natural Science Foundation of Jiangsu, China under Award Number BK2003419.

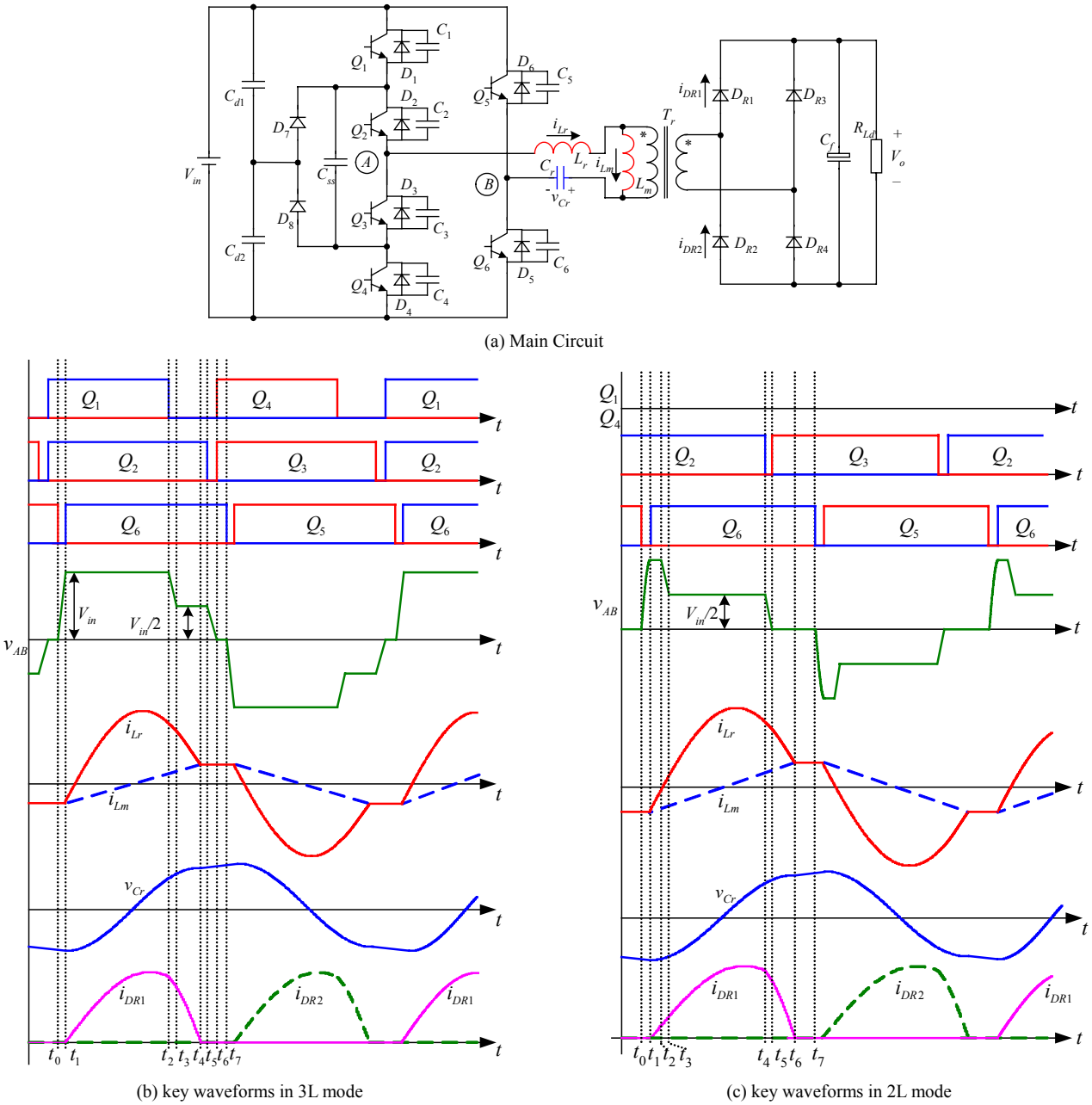

Fig.2 H-FB TL LLC converter

achieved over an wide input voltage range. A 200-400V input, 360V/4A output prototype converter is built in our lab to verify the operation principle of the proposed converter.

II. OPERATION PRINCIPLE

Fig.2 shows the main circuit and key waveforms of the proposed H-FB TL LLC converter, where the switches Q_1~Q_4 (including their body diodes D_1~D_4, and their intrinsic capacitors C_1~C_4), the input divided capacitors C_{d1} and C_{d2}, the freewheeling diodes D_7 and D_8, and the flying capacitor C_{SS} form the three-level leg; the switches Q_5 and Q_6 (including their body diodes D_5 and D_6, and their intrinsic capacitors C_5 and C_6) form the two-level leg; the resonant inductor L_r, the magnetizing inductor L_m, and the resonant capacitor C_r form the LLC resonant tank; D_{R1}~D_{R4} are the output rectifier diodes, C_f is the output filter capacitor, and R_{Ld} is the load.

Since C_r is in series with the power path, automatic flux balancing can be achieved. The leakage inductor of the transformer can be taken into a part of the resonant inductor.

Q_2, Q_3, Q_5 and Q_6 are phase-shifted controlled, Q_2 and Q_3 are the leading switches, and Q_5 and Q_6 are the lagging switches as well. Q_1 and Q_4 are PWM controlled corresponding to Q_2 and Q_3 respectively, so they are called chopping switches.

When the input voltage is low, Q_1 and Q_4 are PWM controlled, a very small fixed shift-phase is introduced between the leading switches and the lagging switches, v_{AB} is a three-level waveform. The output voltage is regulated by the duty cycle of the chopping switches. In this situation, the

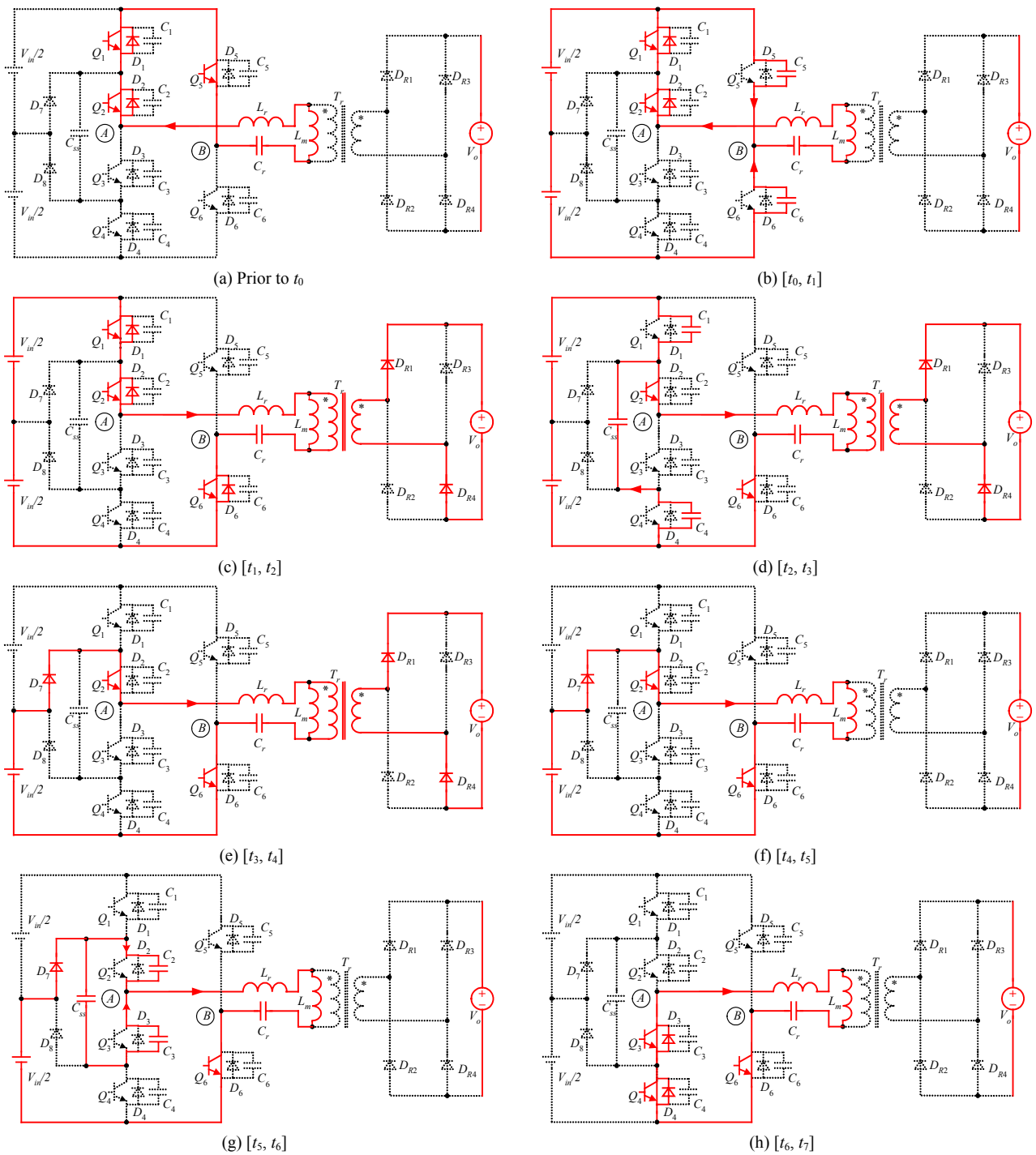

Fig.3 equivalent circuits of each stage in 3L mode

proposed converter operates in three-level mode (3L mode).

When the input voltage increases, or during start-up, overload or short-circuit, the duty cycle of the chopping switches reduces to zero, the shift-phase will be controlled to regulate the output voltage. In this situation, v_{AB} is nearly a two-level waveform, thus the proposed converter operates in two-level mode (2L mode).

The operation principle of the two modes is analyzed in this section. Before the analysis, we make the following assumptions: 1) all the power devices and the diodes are ideal; 2) all the capacitors and the inductances are ideal; 3) C_1=C_2=C_3=C_4=C_{3l}, C_5=C_6=C_{2l}; 4) the divided capacitors C_{d1} and C_{d2} are large enough to be treated as two voltage sources with value of $V_{in}/2$; 5) the flying capacitors C_{SS} is large enough to be treated as a voltage source with value of $V_{in}/2$; 6) the output filter capacitor is large enough to be treated as a constant voltage source during a switching period.

A. Three-Level Mode

Fig.2(b) shows the key waveforms of the three-level mode,

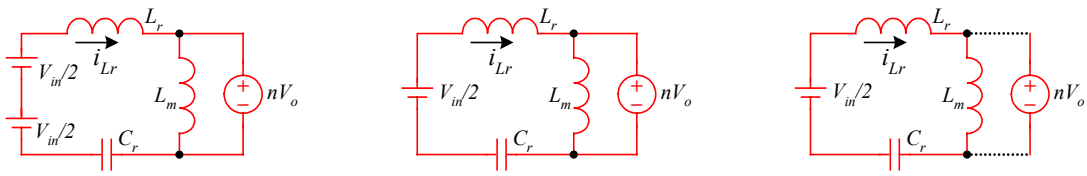

(a) [t_1, t_2] (b) [t_3, t_4] (c) [t_4, t_5]

Fig.4 Further equivalent circuits in 3L mode

there are 7 switching stages in a half switching period, the equivalent circuits are shown in Fig.3.

1) Stage 0 [Prior to t_0] [Refer to Fig.3(a)]: Prior to t_0, Q_5, D_1 and D_2 are conducting, v_{AB}=0. All the rectifier diodes are turned off, so the output is separated from the primary side. L_m and L_r resonate with C_r, and i_{Lm}=i_{Lr}=-I_m, where I_m is the peak value of the magnetizing inductor current.

2) Stage 1 [t_0, t_1] [Refer to Fig.3(b)]: At t_0, turn off Q_5. i_{Lr} charges C_5 and discharges C_6. v_{C5} rises and v_{C6} decays linearly. Q_5 is turn-off with zero-voltage thanks to C_5 and C_6.

3) Stage 2 [t_1, t_2] [Refer to Fig.3(c)]: v_{C6} declines to zero at t_1, and Q_6 can be turned on with zero-voltage. v_{AB} = V_{in}, D_{R1} and D_{R4} conduct, so the voltage of the secondary winding of the transformer is clamped at the output voltage. Therefore, i_{Lm} increases linearly. The difference between the input voltage and the reflected output voltage is applied across the resonant tank, L_r and C_r start to resonate. During this stage, the input power is delivered to the output. The further equivalent circuit is shown in Fig.4(a).

$$i_{Lr}(t) = -I_m \cos\omega_r(t-t_1) + \frac{[(V_{in}-nV_o)-V_{Cr}(t_1)]}{Z_r}\sin\omega_r(t-t_1) \tag{1a}$$

$$v_{Cr}(t) = -Z_r I_m \sin\omega_r(t-t_1) + [(V_{in}-nV_o)-V_{Cr}(t_1)][1-\cos\omega_r(t-t_1)] \tag{1b}$$

$$i_m(t) = \frac{nV_o}{L_m}(t-t_1) - I_m \tag{1c}$$

where $\omega_r = 1/\sqrt{L_r C_r}$, $Z_r = \sqrt{L_r/C_r}$, n is the turns ratio of the primary to secondary windings of the transformer, $V_{Cr}(t_1)$ is the voltage of C_r at t_1.

4) Stage 3 [t_2, t_3] [Refer to Fig.3(d)]: At t_2, turn off Q_1, i_{Lr} charges C_1 and discharges C_4 via C_{SS}. v_{C1} rises and v_{C4} decays linearly. Q_1 is turn-off with zero-voltage thanks to C_1 and C_4. D_{R1} and D_{R4} still conduct, and i_{Lm} keeps increasing linearly.

5) Stage 4 [t_3, t_4] [Refer to Fig.3(e)]: At t_3, v_{C1}=V_{in}/2. D_7 conducts. The difference between V_{in}/2 and nV_o is applied across the resonant tank. The further equivalent circuit is shown in Fig.4(b).

$$i_{Lr}(t) = I_{Lr}(t_3)\cos\omega_r(t-t_3) + \left[(\frac{V_{in}}{2}-nV_o)-V_{Cr}(t_3)\right]\frac{1}{Z_r}\sin\omega_r(t-t_3) \tag{2a}$$

$$v_{Cr}(t) = Z_r I_{Lr}(t_3)\sin\omega_r(t-t_3) + \left[(\frac{V_{in}}{2}-nV_o)-V_{Cr}(t_3)\right][1-\cos\omega_r(t-t_3)] \tag{2b}$$

$$i_m(t) = \frac{nV_o}{L_m}(t-t_3) - I_m \tag{2c}$$

6) Stage 5 [t_4, t_5] [Refer to Fig.3(f)]: With the decline of i_{Lr} and raise of i_{Lm}, they are equal with value of I_m at t_4, i_{DR1} and i_{DR4} decrease to zero, D_{R1} and D_{R4} turn off with ZCS. Therefore, no reverse recovery appears and the voltage across D_{R1} is V_o. During this stage, since the output is separated from the primary side, L_m is freed to be in series with L_r and participate the resonance with C_r. The further equivalent circuit is shown in Fig.4(c). As L_m is quite large, i_{Lr} nearly keeps unchanging and charges C_r, the voltage of C_r increases linearly.

7) Stage 6 [t_5, t_6] [Refer to Fig.3(g)]: At t_5, turn off Q_2. i_{Lr} charges C_2 and discharges C_3 via C_{SS}. v_{C2} rises and v_{C3} decays linearly. Q_2 is turn-off with zero-voltage thanks to C_2 and C_3.

8) Stage 7 [t_6, t_7] [Refer to Fig.3(h)]: At t_6, v_{C2} increases to V_{in}/2, D_3 and D_4 conduct, which provides zero-voltage turn-on condition for Q_3 and Q_4. During this stage, v_{AB} = 0, and the voltage of C_r continues increasing linearly.

This stage ends at t_7 when Q_6 is zero-voltage turned off, starting the second half cycle, similar to the first half cycle.

B. Two-Level Mode

In this mode, Q_1 and Q_4 are fully turned off, and Q_2 and Q_3 are phase-shift controlled with Q_5 and Q_6. Fig.2(c) shows the key waveforms of the two-level mode. There are 14 switching stages in a switching period, among which [t_0, t_4] is the same as [t_0, t_4] in 3L mode. In the following, only the operation during [t_4, t_6] is analyzed. Fig.5 shows the equivalent circuits of [t_4, t_6].

1) Stage 5 [t_4, t_5] [Refer to Fig.5(a)]: At t_4, Q_2 is turned off. i_{Lr} charge C_2 and discharge C_3 via C_{SS}. v_{C2} rises and v_{C3} decays. Q_2 turns off with zero-voltage thanks to C_2 and C_3.

2) Stage 6 [t_5, t_6] [Refer to Fig.5(b)]: At t_5, v_{C2}=V_{in}/2. D_3, D_4 and Q_6 conduct, v_{AB}=0, so nV_o is applied across the resonant tank. The further equivalent circuit is shown in Fig.6(b).

$$i_{Lr}(t) = I_{Lr}(t_5)\cos\omega_r(t-t_5) + [-nV_o - V_{Cr}(t_5)]\frac{1}{Z_r}\sin\omega_r(t-t_5) \tag{3a}$$

$$v_{Cr}(t) = Z_r I_{Lr}(t_5)\sin\omega_r(t-t_5) + [-nV_o - V_{Cr}(t_5)][1-\cos\omega_r(t-t_5)] \tag{3b}$$

$$i_m(t) = \frac{nV_o}{L_m}(t-t_1) - I_m \tag{3c}$$

At t_7, zero-voltage turn off Q_6, and begins next half cycle.

III. CHARACTERISTICS OF THE H-FB TL LLC CONVERTER

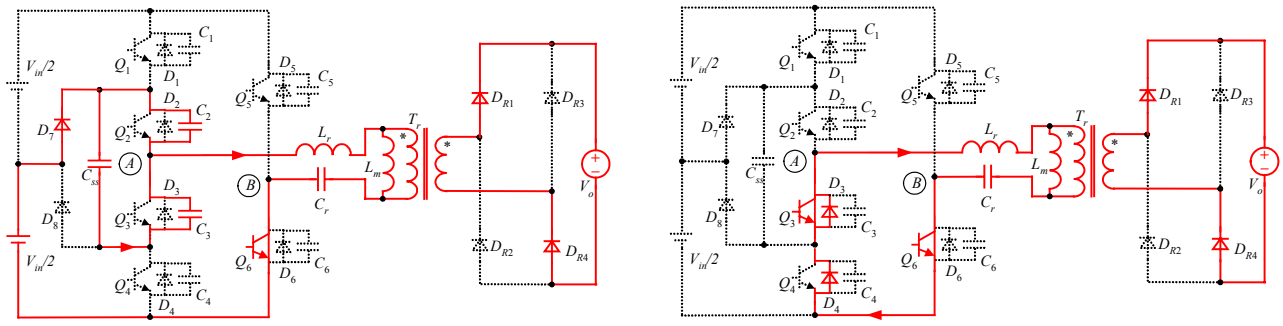

(a) [t_4, t_5] (b) [t_5, t_6]

Fig.5 equivalent circuits of switching stages during [t_4, t_6]

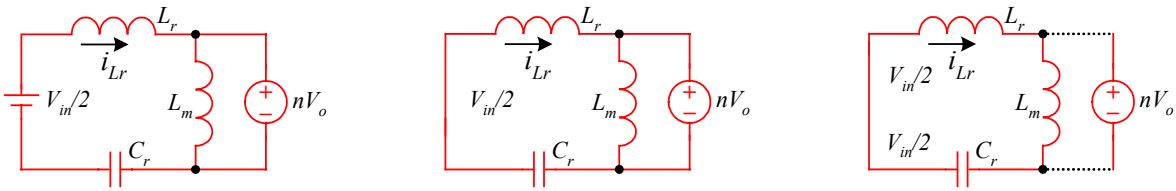

(a) [t_3, t_4] (b) [t_5, t_6] (c) [t_6, t_7]

Fig.6 Further equivalent circuits in 2L mode

H-FB TL LLC converter integrates the advantages of H-FB TL converter and LLC resonant converter. In this section, the characteristics of H-FB TL LLC converter will be analyzed.

Before analysis, some parameters are defined as follows.

Resonant frequency of L_r and C_r: $$f_r = \frac{1}{2\pi\sqrt{L_r C_r}} \quad (4a)$$

Normalized switching frequency: $$f_N = \frac{f_s}{f_r} \quad (4b)$$

Normalized voltage conversion ratio: $$M = \frac{nV_o}{V_{in}} \quad (4c)$$

where f_s is the switching frequency.

From the operation principle analysis above, it can be seen that when f_n<1, and $f_n \approx 1$, The duration time of nV_o applied on L_m is nearly $T_r/2$, and i_{Lm} increases linearly, so I_m can be calculated approximately by:

$$I_m = nV_o T_r / (4L_m) \quad (5)$$

When the switching frequency is higher than f_r, the secondary diodes do not run at ZCS condition and voltage spike will occur. In addition, open load performance is poor and a dead load is needed.

If the converter operates near the resonant frequency f_m, which is determined by L_m, L_r and C_r, the ZVS will be lost. In this case, the magnetizing current reverses its polarity before turn-off the switch, which results in operating under ZCS instead of ZVS. In addition, the resonant capacitor is submitted to high voltage stress. Therefore, the converter is better operate around the resonant frequency f_r.

From the analysis above, it can be seen that f_s is better near f_r and less than f_r. The normalized switching frequency of the prototype in Section IV is chose as 0.9.

A. Voltage conversion ratio

From the operation principle of the converter, one can be seen that the solution of the system depends on the initial conditions of the resonant inductor current and resonant capacitor voltage. As a result, it is difficult to obtain a closed form solution for analyzing the converter. To obtain the steady-state operation, numerical methods can be used.

Fig.7 shows the normalized voltage conversion ratio M of the converter at different duty cycle under full load, using the normalized switching frequency as a running parameter in 2L mode and 3L mode respectively. It is the most important characteristics of the resonant converter. According to Fig.2(b) and (c), Duty cycle D in 3L mode and in 2L mode are defined as (6a) and (6b) respectively.

$$D_{3L} = \frac{t_2 - t_0}{T_s/2} \quad (6a)$$

$$D_{2L} = \frac{t_3 - t_1}{T_s/2} \quad (6b)$$

From Fig.7 it can be seen that the converter has the capability to boost the input voltage. The characteristic of i_{Lr} is that there is a flat and keep unchanging after every sine wave. During this stage, i_{Lr} keeps charging C_r and storing enough energy, which will power the load at the next half cycle. It is the reason that reducing switching frequency leads to increase voltage conversion ratio.

B. Comparison of the output filter and input current ripple

By the input voltage variety, H-FB TL converter can operate under 2L or 3L mode. Therefore, the secondary rectified current has lower high-frequency content, which leads to reduce the output filter [4].

H-FB TL LLC converter maintains the advantage above. Letting the ripple voltage of output filter capacitor be equal, Fig.8 shows the comparison of the normalized output filter capacitor between the H-FB TL LLC converter (solid line) and the FB LLC converter (dotted line) with the same output voltage ripple in the line range. It normalizes the capacitor value of the FB LLC converter under 400V input as 1. From

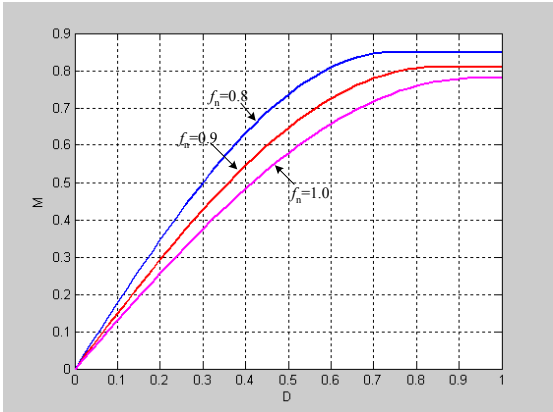

(a) 2L mode

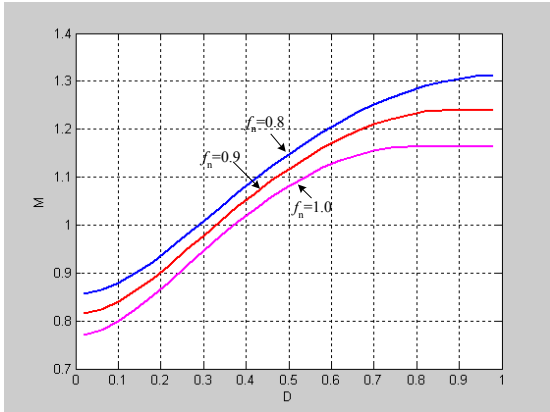

(b) 3L mode

Fig.7 Voltage conversion ratio at different f_N under full load

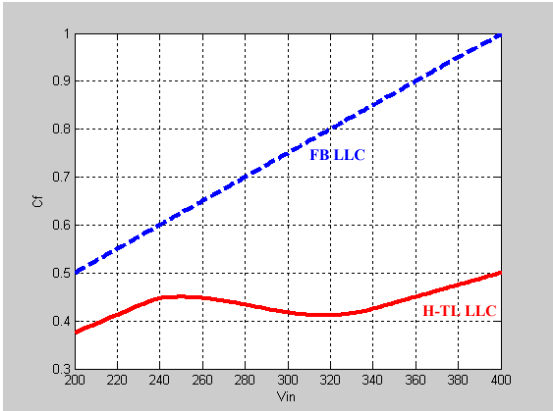

Fig.8 Comparison of output capacitor

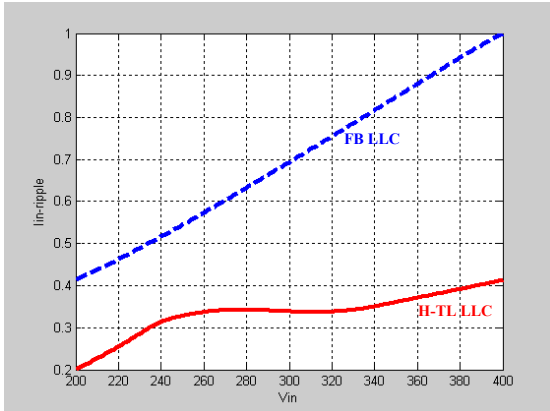

Fig.9 Comparison of input current ripple

Fig.8, we can see that the maximum value of C_f of the H-FB TL LLC converter is just half of that of the FB LLC converter.

Another advantage of H-FB TL converter is that the input current ripple can be reduced [4]. H-FB TL LLC converter also maintains this advantage. Fig.9 shows the comparison of the normalized input current ripple between the H-FB TL LLC converter (solid line) and the FB LLC converter (dotted line). It normalizes the input current ripple value of the FB LLC converter under 400V input as 1. It can be seen that the input current ripple of H-FB TL LLC converter is lower than that of the FB LLC converter. Therefore, this converter is very suitable for fuel cell power system, and it can increase the fuel cell life.

C. Conditions of the achievement of ZVS for the switches

1) Three-Level Leg

The current flow through the chopping switch is larger than that of the leading switch, therefore, the chopping switches are easier to realize ZVS than leading switches.

In order to ensure the zero-voltage turn-on of leading switch, the energy E_1 is needed to fully discharge the intrinsic capacitor of the in-coming switch and charge the intrinsic capacitor of the out-going switch, i.e., during interval $[t_0, t_1]$, L_r is in series with L_m, and the current is maintained to be I_m.

$$E_1 = \frac{1}{2}(L_r + L_m)I_m^2 \geq \frac{1}{2}C_2(\frac{V_{in}}{2})^2 + \frac{1}{2}C_3(\frac{V_{in}}{2})^2 \qquad (7)$$

Substituting (5) into (7) yields

$$\frac{1}{2}(L_r + L_m)(\frac{nV_oT_r}{4L_m})^2 \geq \frac{1}{4}C_{3l}V_{in}^2 \qquad (8)$$

2) Two-Level Leg

When the lagging switch turns-off, the current keeps unchanging and maintains at I_m, so in order to achieve ZVS for the switches of the two-level leg, (9) should be satisfied.

$$\frac{1}{2}(L_r + L_m)I_m^2 \geq \frac{1}{2}C_5(V_{in})^2 + \frac{1}{2}C_6(V_{in})^2 \qquad (9)$$

Substituting (5) into (9) yields

$$\frac{1}{2}(L_r + L_m)(\frac{nV_oT_r}{4L_m})^2 \geq C_{2l}V_{in}^2 \qquad (10)$$

Form Eqs.(8) and (10), it can be seen that the condition of the achievement of ZVS for the switches is independent on the output current. Therefore, if the parameter of the resonant tank can satisfy Eqs.(8) and (10), it will realize ZVS in the whole load range.

IV. EXPERIMENTAL RESULTS

In order to verify the operation of the proposed converter, a 1.5kW prototype converter was built in our lab. The specifications of the prototype are as follow: Input voltage: V_{in}=200-400VDC; Output voltage: V_o=360VDC; Output current: I_o=4A; Switching frequency: f_s=100kHz; Resonant

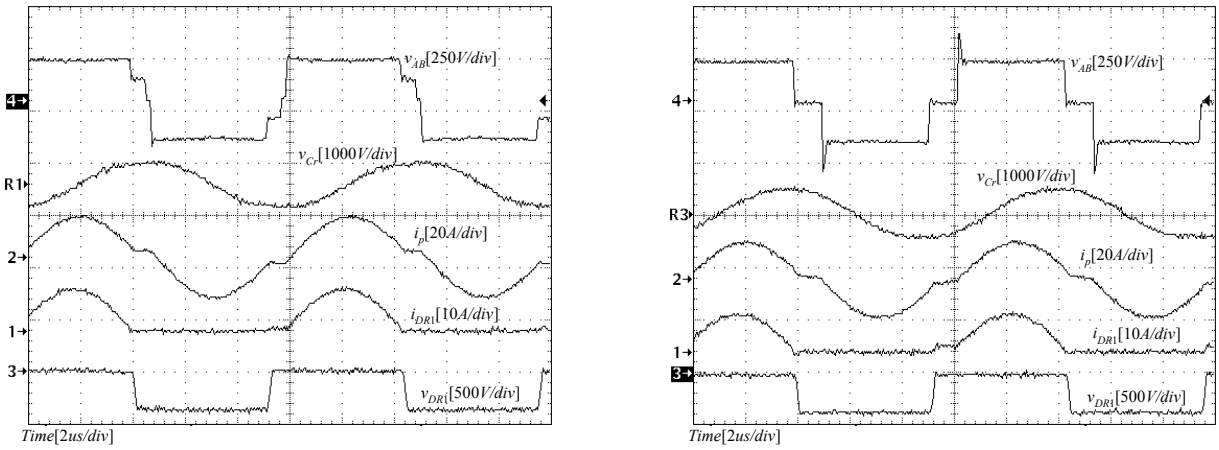

(a) v_{AB}, v_{Cr}, i_p, i_{DR1} and v_{DR1} at V_{in}=200V (3L mode)

(b) v_{AB}, v_{Cr}, i_p, i_{DR1} and v_{DR1} at V_{in}=400V (2L mode)

Fig.10 Experimental waveforms under full load

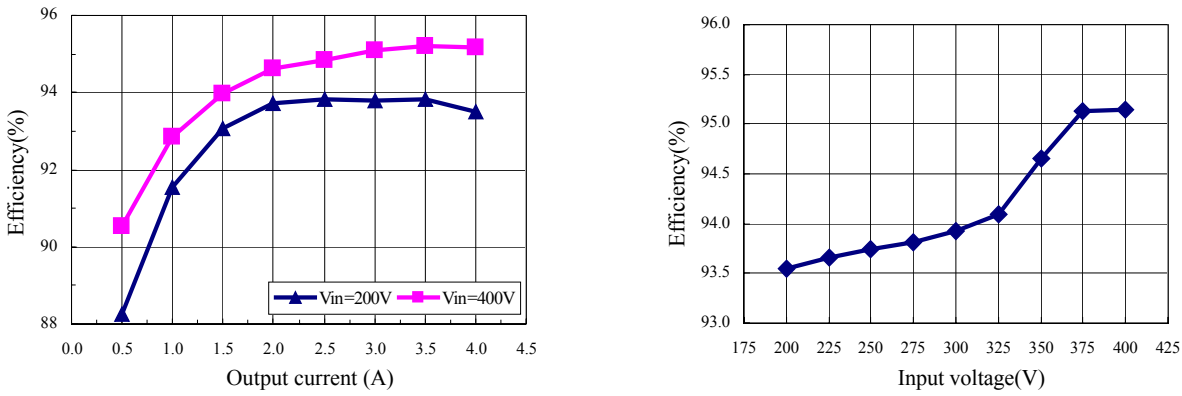

(a) Efficiency at different output current

(b) Efficiency at full load under different input voltage

Fig.11The overall efficiency of the H-FB TL LLC converter

capacitor: C_r=94.4nF; Resonant inductor: L_r=21.7uH; Magnetizing inductor: L_m=120.6uH; Switches Q_1-Q_4: APT30M75BFLL; Switches Q_5-Q_6: SPW47N60C3; Rectifier diodes D_{R1}-D_{R4}: CSD10060; Transformer turns ratio: 9:17.

Fig.10(a) and (b) show the experimental waveforms of v_{AB}, v_{Cr}, i_p, i_{DR1} and v_{DR1} at full load in 3L mode (V_{in}=200V) and 2L mode (V_{in}=400V) respectively. The resonant tank operates perfectly, which is well in agreement with theoretical analysis. It also illustrates that the rectifier diodes operate under a ZCS condition, so no snubber is needed.

Fig.11 gives the overall efficiency of H-FB TL LLC converter. Fig.11(a) shows the efficiency at different output current under the input voltage of 200V and 400V respectively. Fig.11(b) shows the efficiency at full load under different input voltage. It can be seen that efficiency are higher under higher input voltage, which is an important characteristics of LLC converter.

V. CONCLUSIONS

This paper presents a novel hybrid full-bridge three-level LLC converter, which is suitable for fuel cell power system. It has the following advantages: 1) Operating with high efficiency over a wide input voltage range. 2) Three-level leg switches sustain only the half of the input voltage. 3) The voltage stress on rectifier diodes can be minimized to the output voltage, and ZCS is achieved for the rectifier diodes. 4) ZVS capability from nearly zero to full load. 5) Low input current ripple and output filter.

REFERENCES

[1] J. Wang, F.Z. Peng, J. Anderson, A. Joseph and R. Buffenbarger, "Low cost fuel cell converter system for residential power generation," IEEE Trans. Power Electron., vol.19, no.4, pp.1315-1322, Sept. 2004.

[2] K.W.E. Cheng, D. Sutanto, Y.L. Ho and K.K. Law, "Exploring the power conditioning system for fuel cell," in Proc. IEEE PESC, 2001, pp.2197-2202.

[3] H. Xu, K. Li and X. Wen, "Fuel cell power system and high power dc-dc converter," IEEE Trans. Power Electron., vol.19, no.4, pp.1250-1255, Sept. 2004.

[4] X. Ruan, Z. Chen and W. Chen, "Zero-voltage-switching pwm hybrid full-bridge three-level converter," IEEE Trans. Power Electron., vol.20, no.2, pp.395-404, March 2005.

[5] B. Yang, F.C. Lee, A.J. Zhang and G. Huang, "LLC resonant converter for front end dc/dc conversion," in Proc. IEEE APEC, 2002, pp.1108- 1112.

[6] Y. Gu, Z. Lu and Z. Qian, "Three level LLC series resonant dc/dc converter," in Proc. IEEE APEC, 2004, pp.1647-1652.

[7] G.S.N. Raju and S. Doradla, "An LCL resonant converter with pwm control - analysis, simulation, and implementation," IEEE Trans. Power Electron., vol.10, no.2, pp.164-174, March 1995.

[8] F. Canales, P. Barbosa, C. Aguilar and F.C. Lee, "A high-power- density dc/dc converter for high-power distributed power systems," in Proc. IEEE PESC, 2003, pp.11-18.